White Paper

How to Certify or Re-certify Twisted-Pair Cabling for 10 Gb/s Ethernet

And testing guidelines for Alien Crosstalk (AXTalk)

The standards review board of the Institute of Electrical and Electronics Engineers (IEEE) approved the standard for 10 Gigabit/sec Ethernet over twisted-pair copper cabling (10GBASE-T) on June 8, 2006. This paper provides a background and an overview of the performance requirements for the twisted-pair cabling and methods to measure and certify the performance of the installed cabling system.

Table of contents

FLUKE networks

Introduction to 10GBASE-T field testing and certification

The field certification of twisted-pair cabling for 10GBASE-T consists of two phases. First, all the installed cabling links must meet the performance specified by the in-channel test parameters over the frequency range from 1 MHz through 500 MHz. The in-channel parameters refer to the test parameters of and between wire pairs within one cabling link. Field certification up to the advent of 10GBASE-T only evaluated in-channel test parameters. These parameters remain the same as currently specified in the TIA/EIA-568-B document for Cat 5e/Cat 6 or in the ISO 11801 standard for Class D, E and F but some have been renamed.

Table 1 – In-Channel test parameters for 10GBASE-T are the same as those for Cat 5e and Cat 6. A few parameters have been renamed.

Test Parameter – 'Old' Name	Test Parameter – 'New' Name
Insertion Loss (IL)	Insertion Loss (IL)
Near End Crosstalk (NEXT)	Near End Crosstalk (NEXT)
Power Sum Near End Crosstalk (PSNEXT)	Power Sum Near End Crosstalk (PSNEXT)
Attenuation to Crosstalk Ratio (ACR)	Attenuation to Crosstalk Ratio – Near End (ACR-N)
Power Sum Attenuation to Crosstalk Ratio (PSACR)	Power Sum Attenuation to Crosstalk Ratio – Near End (PSACR-N)
Far End Crosstalk (FEXT)	Far End Crosstalk (FEXT)
Equal Level Far End Crosstalk (ELFEXT)	Attenuation to Crosstalk Ratio – Far end (ACR-F)
Power Sum Equal Level Far End Crosstalk (PSELFEXT)	Power Sum Attenuation to Crosstalk Ratio – Far End (PSACR-F)
Return Loss (RL)	Return Loss (RL)
Wire Map	Wire Map
Propagation Delay	Propagation Delay
Delay Skew	Delay Skew
Length	Length

Table 1 lists the in-channel parameters with their old names and new names as well as their abbreviations. The 10GBASE-T test limits for these in-channel parameters are identical to the limits for Cat 6 up to 250 MHz but the frequency range and performance specifications for these tests is extended to 500 MHz in order to support the much higher bandwidth required for the 10 Gb/s Ethernet signaling rate. In addition, in the second test phase, the Alien Crosstalk (AXTalk) test parameters discussed in this paper must be included with the field certification effort for 10 Gbps Ethernet (10 GbE). The AXTalk parameters are referred to as the between-channel test parameters.

Understanding Alien Crosstalk and how it impacts 10 Gb/s performance

Crosstalk measures signal coupling from one wire pair to another within a twisted-pair cabling link. This kind of coupling is undesirable since it creates a noise disturbance in a wire pair. The effect of crosstalk is very similar to a noisy transmission line. A receiver may not be able to distinguish the signal sent by the transmitter from the noise induced by crosstalk. In all data communications, crosstalk is a critical performance parameter.

Two effects are at work to limit the usable bandwidth of a twisted-pair cabling link. The signal strength of a signal arriving at the end of the transmission link (input to the receiver) diminishes as the frequency of the signal increases. Expressed in cable testing terms: the insertion loss (attenuation) of the transmitted signal increases as the frequency of the signal increases. The strength of the crosstalk disturbance between wire pairs increases as the frequency of the transmitted signal increases. The combination of these two effects is the reason that we will find a frequency at which the noise created by crosstalk equals the signal received from the transmitter. This frequency is typically around 120 MHz for Cat 5e channels that approximate 100 m in length and around 240 MHz for full-length Cat 6 channels. Without sophisticated digital signal processing techniques in the electronics, reliable transmission is no longer possible at or beyond this "cross-over" frequency. This phenomenon sets a limit for the bandwidth of twisted-pair cabling.

10GBASE-T signaling requires a cabling bandwidth up to 500 MHz, which is much higher than the 100 MHz bandwidth required for 1000BASE-T (1 Gigabit/sec Ethernet). Because of these very high frequencies, one significant new disturbance must be characterized, that is the crosstalk between wire pairs in adjacent cables. The crosstalk between wire pairs in adjacent cables is called Alien Crosstalk (AXTalk).

The measurement (test) parameters

Near-End Crosstalk or NEXT measures the crosstalk signal that appears at the same end of the cabling link from which the test signal or disturbing signal is launched. Figure 1 illustrates NEXT in a two wire-pair system. If full duplex transmission simultaneously takes place over multiple wire pairs in the link, as is the case in 1000BASE-T and 10GBASE-T, Far-End Crosstalk (FEXT) must be considered and tested as well (See Figure 2).

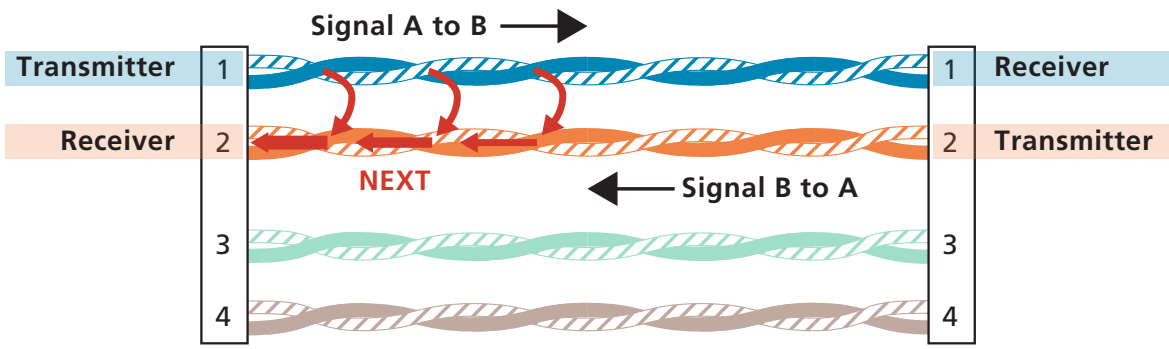

Figure 1 – Near-End Crosstalk (NEXT) measures the crosstalk induced by "signal A to B" in pair 2 that returns to the receiver side and competes with "Signal B to A" arriving at the same receiver over pair 2.

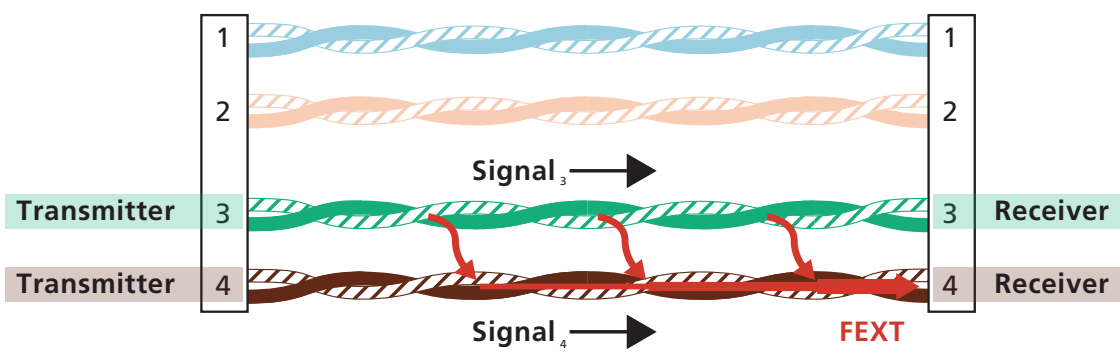

Figure 2 – Far-End Crosstalk (FEXT) measures the crosstalk induced in wire-pair 4 that travels the length of the cable in the direction of the transmitted signal and competes with the clarity of "Signal 4" arriving at Receiver 4.

The crosstalk depicted in Figures 1 and 2 takes place between wire pairs in one cable (wire pairs wrapped in the same sheath) and is measured by the in-channel test parameters NEXT and FEXT. AXTalk is the exact same phenomenon but the crosstalk coupling now occurs between wire pairs in different cabling links routed in proximity to each other for part or for all of their length.

AXTalk will be measured as Alien NEXT (ANEXT) between wire pairs as well as Alien FEXT (AFEXT). Since the combined impact of many wire pairs in the bundle upon the wire pair under test (usually referred to as the disturbed wire pair) must be assessed, Power Sum Alien NEXT (PSANEXT) and Power Sum Alien Attenuation-to-Crosstalk-Ratio from the Far end (PSAACR F) must be computed and evaluated for the wire pair under test.

Alien Crosstalk Performance is critically important for 10 Gbps Ethernet

The electronics in high-speed transmissions like 1000BASE-T and 10GBASE-T use Digital Signal Processing (DSP) techniques to enhance in-channel performance of the cabling for NEXT and Return Loss. However, a transmitter has no knowledge of the signaling outside the four wire pairs in a link and therefore has no means to perform mitigation, crosstalk cancellation or improve performance against an Alien Crosstalk noise source. The cabling system must – and only the cabling system can – provide the Alien Crosstalk performance required to obtain a reliable and error free transmission when deploying these very high data rate network applications. AXTalk is a challenge for twisted-pair cabling, as it is the most significant disturbance or noise source for the 10 Gbps Ethernet application. Figure 3 shows how Crosstalk can be induced in a wire pair by wire pairs in adjacent cables.

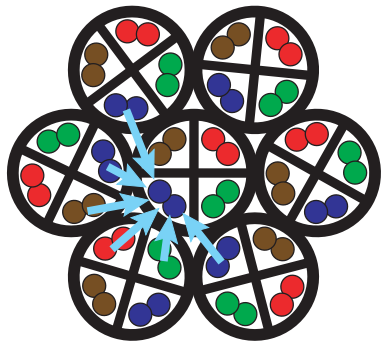

Figure 3 – Alien Crosstalk measures the crosstalk signal induced in a wire-pair in the "victim" cable by wire-pairs in adjacent cables in the bundle or pathway. Alien Crosstalk is also defined and measured as Alien NEXT and Alien FEXT.

Testing Alien Crosstalk

This section describes the method to measure the AXTalk components. The measurement method describes the hardware and software configuration of the test tools to measure the crosstalk between wire pairs in adjacent cables. The next section describes a test strategy for certification or re-certification of an existing cabling system. The test strategy discusses the way in which the test of a cabling installation may be approached. It is in most cases not economically feasible or affordable to test the AXTalk between all possible wire pair combinations, nor is this necessary.

Measurement Method

As depicted in Figure 4, we measure Alien NEXT by connecting the main DTX-1800 unit to the disturbed link and the Smart Remote unit to a disturber link. These two units need to synchronize the measurement process. A special AXTalk Communication Module plugs into the back of the Fluke Networks DTX-1800 units in the same place where a fiber optic loss test module such as the DTX-MFM2 can be inserted. A standard patch cord may be used to connect the two communication modules and complete the linkage required for the measurement synchronization. A tester unit does now not terminate the far ends of the cabling links-under-test. An open circuit at the end of a link creates a very significant reflection of the test signals. A special termination plug must be installed at the end of these two links to avoid reflections from the far end, which would interfere with the measurement process and jeopardize its accuracy. All the possible wire pair combinations for Alien NEXT between two cabling links count sixteen (16) combinations and are measured and evaluated over the frequency range from 1 MHz through 500 MHz. The DTX-1800 performs these tests in 16 seconds.

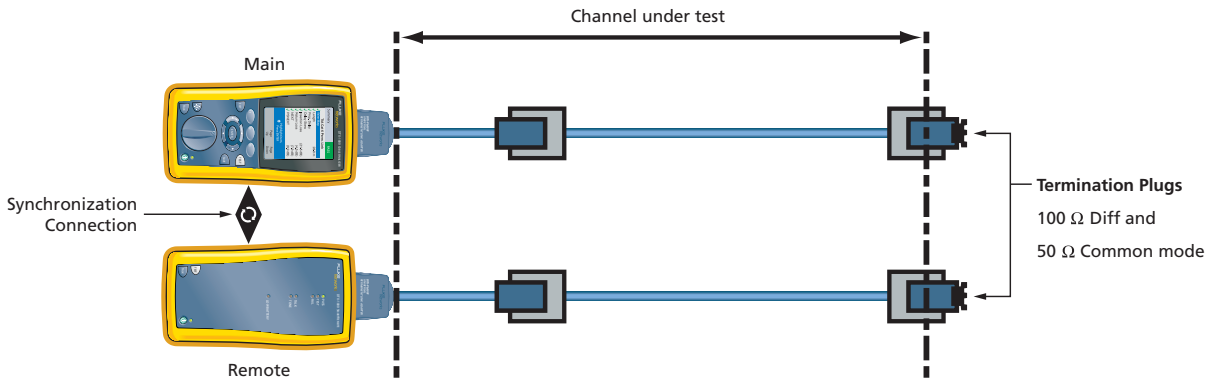

Figure 4 – Pair-to-pair Alien NEXT measurements. The main and remote units are sitting side-by-side at one end of the cabling bundle under test. These units are plugged into different cables. A standard patch cord connects the synchronization of the Alien Crosstalk Modules plugged into each of the testers to allow the testers to perform all of the pair-to-pair NEXT measurements between the wire pairs of two selected cabling links.

Figure 5 shows the connections of the testers to measure the pair-to-pair Alien FEXT between cables in a bundle. To complete the full evaluation of a disturbed link, the main unit remains plugged into this disturber link while the Smart Remote is now connected to the disturbers at the opposite end. The tester units are configured with the same AXTalk Communication Modules we described above to synchronize the Alien FEXT measurements. A spare cabling link or a link that is included in the measurements can be used to provide the synchronization path between the main and remote tester units. The open ends of the links involved in this test must be terminated by the same type of terminator plug as described above for Alien NEXT testing. A "spare" link should be readily available when testing Alien FEXT between cables that run in one bundle from one rack to another. Figure 6 shows an alternate method to synchronize the testers for the Alien FEXT measurement between two horizontal links that are terminated in faceplates in close proximity in a work area. In this configuration, the Crosstalk Communication Modules provide the termination for the links-under-tests and as the figure depicts the modules use the disturbed link and the disturber to maintain communication and synchronization. The DTX test units always verify that each link is properly terminated before conducting the AXTalk tests. Using the configuration shown in Figure 6, this verification takes about 8 or 9 seconds longer than in the case a separate link is available.

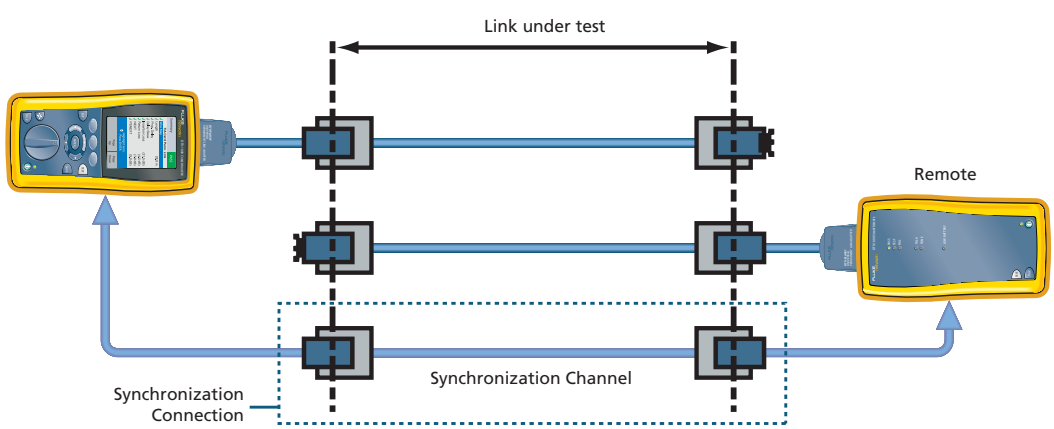

Figure 5 – Pair-to-pair Alien FEXT measurements. The main and remote units are plugged into different cabling links at opposite ends of the bundle under test. A spare channel in this bundle connects the synchronization modules plugged into each of the testers to allow the testers to perform all of the pair-to-pair FEXT measurements between the wire pairs of two selected cabling links.

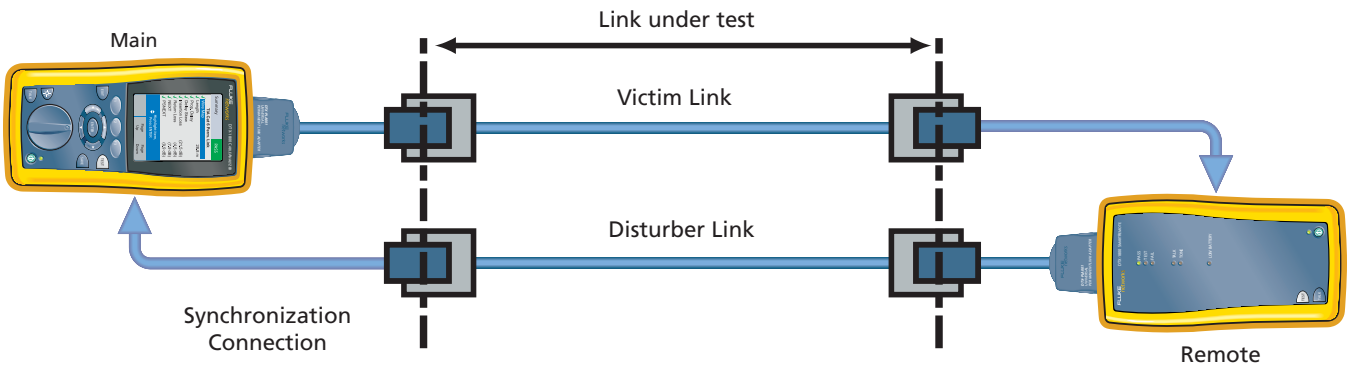

Figure 6 – Alternate Pair-to-pair Alien FEXT Measurement. When no "third" or spare link is available to connect the two testers' Alien Crosstalk Communication Modules, these Connection Modules perform a dual role. They provide the test link termination and allow the two tester unit to synchronize the measurement actions. The testers always verify that a valid termination is present at each link. The latter verification requires more time in this alternative mode than in the setup shown in figure 5.

Power Sum Measurements

The AXTalk evaluation of a cabling bundle does not stop with the measurement of the AXTalk coupling between individual wire pairs. During full network operation, all wire pairs in a cabling bundle simultaneously transmit in full duplex (signals flow in both directions on each wire pair). Therefore, any wire pair will be affected by transmissions on numerous wire pairs surrounding it in a cabling bundle or pathway. This combined affect of many surrounding cables is captured by calculating the Power Sum Alien NEXT (PSANEXT) and Power Sum Alien Attenuation-to-Crosstalk Ratio–Far End (PSAACR-F) test parameters.

To perform the AXTalk measurements, the DTX-1800 main unit is connected to a (laptop) computer using the USB connection. The AxTALK Analyzer™ software running in the computer controls the DTX-1800 tester, imports the pair-to-pair ANEXT or pair-to-pair AFEXT measurement results data and calculates in real time the power sum test results for each wire pair in the disturbed link (the link-under-test). As the crosstalk effects of wire pairs in additional disturber links are measured, the AxTALK Analyzer software automatically calculates the combined effect of all the disturbers included in the test so far and displays the power sum AXTalk test result.

Normalization of AFEXT test results

The Alien FEXT measurements may require scaling of the test results data. When two links of different lengths join at a patch panel, the FEXT coupling from the shorter link into the longer one may cause the test of the longer link to fail. The signal traveling on the shorter link is much stronger when it arrives at the end of the link than the signal on the longer link that has been subject to much greater attenuation. The Alien Crosstalk coming from the much stronger signal on the short disturber link may overpower the relatively weak signal on the longer link. The 10 Gbps Ethernet system design considers this condition and provides for an initialization during the "Auto negotiations" between two devices. If a 10GBASE-T receiver detects a very strong signal, it signals to the transmitting device at the other end of the link to scale its output signal strength down. All devices will therefore produce signals at the receivers that are "comparable" in strength and the Alien FEXT will allow the system to operate. The scaling required during the Alien Crosstalk test phase is called 'Normalization" and is based on the Insertion Loss results of the two links involved in the test. If normalization were not implemented, longer links may produce a false fail results for the PSAACR-F tests.

Fluke Networks implements the normalization in the AxTALK software by using the test results data of test phase 1 (in-channel tests). The LinkWare test results for the links involved are loaded by the AxTALK software in the PC. A PC is well suited to manage the potentially large number of test result records and to implement the normalization calculations in real time during the Alien Crosstalk test of each set of links when required.

Alien Crosstalk Test Strategy

The effort to obtain the Power Sum test results for each wire pair in a bundle can very quickly mushroom into a time- and resource-consuming task. Each additional cabling link to be added to the Power Sum calculations requires sixteen pair-to-pair measurements, which are executed in 16 seconds of test time plus time to access and connect to the next disturber link.

AXTalk is a very significant component of the noise budget when transmitting 10 Gbps Ethernet over twisted-pair cabling. Therefore, field testing of the AXTalk performance parameters is required to provide assurance that the cabling installation will be able to support this high-speed network application. However, a reasonable test time is also very desirable, therefore it is important to devise a sampling technique to select a limited number of links to be evaluated while providing a high confidence factor that the installed cabling plant meets the AXTalk requirements. To avoid confusion between disturbed and disturber we will refer to the disturbed link as the "victim" link – a common practice).

Alien Crosstalk sampling guidelines

Practical field test results have proven that AXTalk between cables in different bundles or pathways is non-existent or negligible. The AXTalk test methods are therefore to be organized on a bundle basis, that is to say, to cabling links that are bundled together. To properly test any one disturbed or victim link, the following links must be included as disturber links:

(1) all of the links that belong to the same bundle as the victim link and

(2) the links that are terminated in adjacent positions in the patch panel

A practical test strategy for AXTalk compliance consists of testing installed links that present a greater challenge to comply and therefore present the highest probability of failing. Compliance with 10GBASE-T requirements will be most difficult for the longest links. Compliance with the newly developed Augmented Cat 6 (Cat 6A) or Augmented Class E (Class EA) cabling standard will be most challenging for the longer cabling links and for shorter links in which the distance between connectors is smallest. All of the less challenging links will perform better and will most likely pass and pass with better margins. Recall that the workmanship of the links in the cabling plant has already been assured by the "in-channel" tests executed to 500 MHz. The details of the sampling technique are outlined in the next section.

Re-certification of an installed Cat 6 cabling system in the Data Center

The applicable standards

The IEEE project 802.3an document addresses the cabling performance requirements for 10GBASE-T. The test methods described in this article fully implement and comply with the published 10GBASE-T testing requirements. The cabling industry (the Telecommunications Industry Association (TIA) and the International Organization for Standardization (ISO)) has created two different standards:

(1) Documents that define the minimum performance of a twisted pair link to be used to support the10GBASE-T application. TIA released a "Telecommunication Systems Bulletin" (TSB) referred to as TIA TSB-155. ISO is in the process of developing a 'Technical Report' (TR 24750) that parallels the content of TIA TSB-155. The channel specifications in these documents are identical to the requirements established in the IEEE 802.3 standard for 10GBASE-T. TIA TSB155 and TR 24750 also include test specifications for the "permanent link" model. It is worth noting that these documents do not define a new cabling standard but serve as specifications for links that must be able to support the 10GBASE-T application. Length restriction apply for Cat 6 links when transmitting 10GBASE-T. Although an initial channel limit of 55 m (180 feet) had been discussed, all installed Cat 6 bundles should be evaluated for compliance as discussed in this paper. When these tests pass, you have the assurance that the installed cabling can support 10GBASE-T.

(2) The new augmented category 6 standard (TIA Cat 6A) and the new augmented Class E standard (ISO Class EA). The new standard defines a new cabling type that is intended to support 10GBASE-T transmission over up to 100 m channels.

Test Procedure

The first step or test phase always requires that 100% of the links designated to transmit 10GBASE-T traffic must be tested against the in-channel performance specifications and all links must pass. You only need the DTX-1800 to perform this test phase. Be sure to select the proper test standard. If you are testing the cabling links as channels (with the network patch cords in place), you can either choose the 10GBASE-T "application" standard, the TIA TSB-155 or the ISO TR 24750 channel test. These three options are identical. You can also choose to perform the in-channel tests for the installed cabling using the permanent link model and select the TSB-155 permanent link test in your DTX-1800.

In the second test phase, we evaluate the AXTalk performance of the installed Cat 6 cabling installation. Fluke Networks has developed a test strategy for two distinct scenarios.

1. **A limited number of links must be certified to support 10GBASE-T traffic**
   If only a few links in the data center are singled out to carry 10GBASE-T traffic, you can perform the AXTalk tests for those few links. The following cabling links should be included as disturbers in each of these tests independent of the network applications these links carry:

   a. All the links in the same bundle as the selected link

   b. Links terminated in adjacent positions in the patch panel

2. **Testing a complete cabling (sub)system**
   When you are planning to certify a cabling system for 10GBASE-T compliance rather than a few selected links follow the procedures outlined in this section.

   a. The number of links to be selected and tested as "victim" links is 1% of the total number of links in the cabling installation, or five links, whichever is greater.

   b. The victim links should be tested from the cross-connect patch panel location (floor distributor). Testing from the remote end is performed when the cabling bundle runs from patch panel to patch panel, which is a more typical case in a data center.

   c. Since the longer cables are most at risk for failing AXTalk requirements, the longest links in a cabling installation should be selected as "victim" links. If all of the longest links are bundled together, test the longest in the bundle up to 10% of the links in the bundle. If these tested links pass, select the longest links in the bundle containing the next longer victim links such that as many bundles as practical are covered.

      Experiments have shown that for every 10 meter reduction in link length, the overall AXTalk margin tends to improve between 1.5 dB and 2.5 dB. Therefore, if the AXTalk worst case margin for a victim link has reached 5 dB, testing of shorter victim links should not be necessary, provided the link configurations and components used are of the same quality.

   d. Actual selection of the victim links in the installation is most easily done in advance when the test results from Phase 1 are imported and organized in the LinkWare test results management program on your computer.

      The LinkWare program has been structured to list cables by panel or by rack. When the technicians open the LinkWare project file containing the test results data from Phase 1, they can select the subfolder with the tests results for cables that belong to a bundle or a panel. The process of identifying and selecting the right victim and disturbers in the AxTALK Analyzer™ software will be simple, save time and avoid meaningless tests (wasted time). Of course, if LinkWare contains tests results organized by rack or panel, the technicians must have the documentation on site that shows the bundling of the cabling links.

Overall test time

The DTX-1800 is the fastest field test tool in the market. A Cat 6 Autotest executes in 9 seconds. When performing the in-channel test for the 10 Gbps Ethernet application to 500 MHz, the test time increases because of the extended frequency range. An Autotest over the range from 1 MHz through 500 MHz executes in 22 seconds and delivers test results in full compliance with the 10GBASE-T, TIA and ISO standards. These standards specify the frequency range as well as the maximum allowable step size between consecutive measurements.

Applying the test procedures and test times outlined above, we can estimate a total test time to certify a few links or a cabling installation for compliance with the 10GBASE-T requirements.

First, let us examine the case in which a few selected links need to be re-certified for 10 Gbps Ethernet deployments. We estimate the Total Time to Certify (TTC) the in-channel parameters for each link at 44 seconds; this time consists of three components and the third one is an estimate.

(1) Autotest time for in-channel certification of a link: 22 sec

(2) Time to save the test results data: 2 sec

(3) Time to move from channel to channel in the data center: 20 sec

In estimating the TTC for the alien crosstalk tests, we arrive at 36 seconds. This time consists of two components:

(1) The DTX-1800 performs the complete analysis between two links in 16 seconds

(2) We estimate the time to move from one disturber to the next one at 20 seconds

Table 2 below shows the total time to certify a limited number of links for 10GbE deployment. This time depends on the number of links to be certified, the size of the bundles and whether the links to be certified belong to the same bundle(s) or whether they each belong to a different bundle. The total time to certify in Phase 2 increases significantly with bundle size. The test times in Table 2 reflect the assumption that in a bundle of 12 links, one victim needs to be tested; in a bundle of 24 links, two victim links are tested. From a testing perspective, if a limited number of links are to be re-certified for 10 GbE deployments, it is advantageous to keep those links bundled together. Furthermore, as the data in Table 2 shows, smaller bundles save time and smaller bundles typically provide better test results.

Table 2 – Total Time to certify a limited number of cabling links for 10 GbE deployment

Number of links to be certified for 10GBASE-T	Phase 1 "In-Channel" test time	Phase 2 "Between-Channel" test time		Total Time To Certify
	min:sec	*Bundle size(*)*	*min:sec*	*hrs:min*
5	3:40	12	15:12	0:19
12	8	12	15:12	0:24
24	17:36	12	30:24	0:48
	17:36	24	59:12	1:17
48	35:12	12	60:48	1:36
	35:12	24	114:40	2:30

(*) Notes: One victim link is to be selected in each 12-link bundle
Two victim links are to be selected in each 24-link bundle
All "other" links in the bundle should be included as disturber links

We also discussed the sampling scenario in which a full cabling system or subsystem needs to be (re-)certified for compliance with the 10GBASE-T standard. We will use the same basic test time assumptions as stated above. Table 2 shows the total time to certify based on the sampling rules we proposed earlier. The data in Table 3 applies to data center cabling; the links run from one panel to another. In such case, ANEXT is measured from both ends of the bundle while AFEXT is measured from one end. We allocate two minutes in the TTC to move test equipment form one end to the other. We assume in this table that as much as possible the victim links have been selected out of different bundles or pathways.

Table 3 – Total Time to (re-)certify a cabling installation

Number of links in the installation	Phase 1 "In-Channel"	Phase 2 "Between-Channel"			Overall Time To Certify (hrs:min)	Phase 2 test time as percent of Overall
	(hrs:min)	*Victim links*	*Bundle size*	*Test time (hrs:min)*		
100	1:14	5	12	1:16	2:29	50.9%
	1:14	5	24	2:28	3:41	66.9%
500	6:07	5	12	1:16	7:23	17.2%
	6:07	5	24	2:28	8:35	28.8%
750	9:10	8	12	2:02	11:12	18.1%
	9:10	8	24	3:57	13:07	30.1%
1000	12:14	10	12	2:32	14:45	17.2%
	12:14	10	24	4:56	17:09	28.8%
5000	61:07	50	12	12:40	73:47	21.7%
	61:07	50	24	24:40	85:47	28.8%

Evaluation of Alien Crosstalk results for 10GBASE-T

The IEEE802.3an standard on 10GBASE-T has three sets of performance requirements, all of which are calculated with the insertion loss of the disturbed and disturbing links. The third criterion listed MUST be met in order to pass the requirements for 10GBASE-T.

(1) Power Sum Alien NEXT (PSANEXT) is measured over the full frequency range from 1 through 500 MHz. The results for each wire pair are evaluated against a Pass/Fail limit line. The average PS ANEXT of all four pairs in the disturbed link is calculated as well. The average result is compared to a separate limit line.

(2) Power Sum Attenuation to AXTalk Ratio – Far End (PSAACR-F) is the difference between the measured Power Sum Alien FEXT and the insertion loss (attenuation) of the corresponding wire pair in the disturbed (victim) link. In the current IEEE 803.3an standard and in previous drafts of TR 24750 and TSB-155, PSAACR-F is called PSAELFEXT (Power Sum Alien Equal Level Far End Crosstalk). This parameter must be measured/calculated for each wire pair in the disturbed (victim) link over the full frequency range. The average value of the four pairs in the disturbed link is calculated and compared to the Pass/Fail limit line for the average.

(3) Alien Crosstalk Margin Calculation (ACMC) is an average margin for the combination of PSANEXT and PSAACR-F. This average margin is a single number for each pair and, once more, a single number for the average of the four pairs; and each of the 5 ACMC results must be greater than 0 dB.

All the computations from pair-to-pair Alien NEXT and Alien FEXT measurements, and previously obtained insertion loss (attenuation) measurements (phase 1 of the test procedure) are rather complex. The DTX AxTALK Analyzer software implements all these rules in full

compliance with the standards. It is important to note that as a minimum, the requirement for ACMC must be met for 10GBASE-T compliance with AXTalk specifications (see point (3) above). It is perfectly acceptable, as defined in the IEEE 802.3an standard, to have one or more failing results for PSANEXT and/or for PSAACR-F as long as all 5 ACMC values are greater than 0 dB. In practice, ACMC will often pass when either PSANEXT or PSAACR-F shows a few failures.

Certifying a new "Augmented" cabling system

The Telecommunications Industry Association (TIA) has also created specifications for a new cabling type called "Augmented Cat 6" abbreviated as Cat 6A. This standard is published as Amendment 10 to the TIA/EIA-568-B.2 standard (TIA/EIA-568-B.2-10). The ISO standards committees are undertaking a similar effort for the publication of the "Augmented Class E" standard (abbreviated as Class EA).

These "Augmented" cabling types (Cat 6A and Class EA) have been defined to deliver better AXTalk performance than Cat 6 or Class E with the goal that a well-installed horizontal channel of 100 m constructed with Augmented cabling components meets the AXTalk specifications and supports 10GBASE-T traffic. Note that the specifications for a new cabling type like Cat 6A require that performance requirements have to be defined for cable, connecting hardware and patch cords.

Test procedure

Certification of Augmented Cat 6 or Augmented Class E cabling links consists of the two phase process we discussed above. The first phase (as was the case with re-certification of Cat 6/Class E links) consists of the test of the in-channel test parameter from 1 MHz through 500 MHz. One hundred percent of the installed links should be tested and must pass to meet the requirements of this first certification phase.

The second phase of the certification requires the evaluation of the AXTalk performance. Testing AXTalk will again be based on a sampling method. Select the longest links in the test sample as well as the shortest links. Both these types of links are considered the most probable links to fail the AXTalk transmission requirements. If these links pass, all other – less challenging – links will pass the tests. The same rules may be applied as we described above for the re-certification of installed Cat 6/Class E links.

The Augmented Cat 6 standard specifies rules (1) and (2) for the evaluation of Cat 6A (paragraph Evaluation of Alien Crosstalk results for 10GBASE-T). The Pass/Fail limit values for Cat 6A are more demanding that those for 10GBASE-T. Option (3) explained above using the Alien Crosstalk Margin Calculation (ACMC) does not apply when certifying compliance with the new Augmented Cat 6/Class E cabling standard.

Conclusion

The 10 Gb/s Ethernet standard (10GBASE-T) has been approved and is released. It is important to note that carefully installed Cat 6 or Class E cabling systems may well meet the transmission requirements to support 10GBASE-T with limitations for the channel length. The Fluke Networks' DTX-1800 CableAnalyzer allows the user to verify the performance of the link parameters (in-channel test parameters). In addition, the 10GBASE-T standard specifies that the coupling between cables in the same bundle or pathway needs to be measured and evaluated (between-channel test parameters or AXTalk certification).

Fluke Networks offers two accessory kits for the DTX-1800 – the DTX-10GKIT and the DTX-AXKIT – that provide the test solution to measure and evaluate the AXTalk performance of installed cabling. AXTalk does not require a 100% test of all possible link interactions. The test procedure may be limited to links that are bundled together. This paper covers a recommended sampling procedure to select and test links such that a very high degree of confidence is established that the cabling plant complies with the AXTalk performance requirements.

The same equipment and sampling procedures cover the field certification of new cabling installations constructed with the augmented cabling types.

Contact Fluke Networks

For additional information call **800-283-5853** (US/Canada) or **425-446-4519** (other locations). **Email: info@flukenetworks.com** or visit **www.flukenetworks.com**

NETWORKSUPERVISION

Fluke Networks
P.O. Box 777, Everett, WA USA 98206-0777

Fluke Networks operates in more than 50 countries worldwide. To find your local office contact details, go to **www.flukenetworks.com/contact**.

Printed in U.S.A. 4/2008 2545521 D-ENG-N Rev C